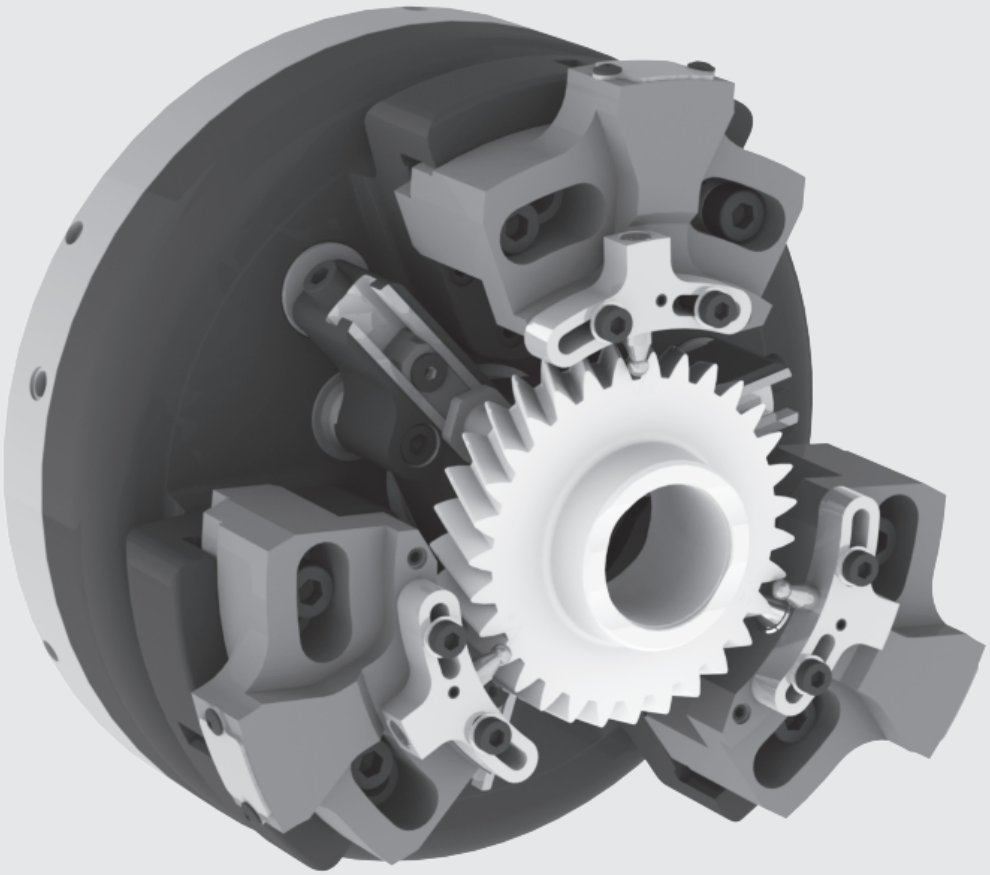

Typ D

Diaphragm chuck

Chuck sizes Ø 210 - 400 mm

- Diaphragm technology for highest precision
- Pitch line clamping or O.D. clamping
- With or without open center

Type D

Diaphragm chuck
QUICK JAW CHANGE SYSTEMS

Main dimensions and technical data

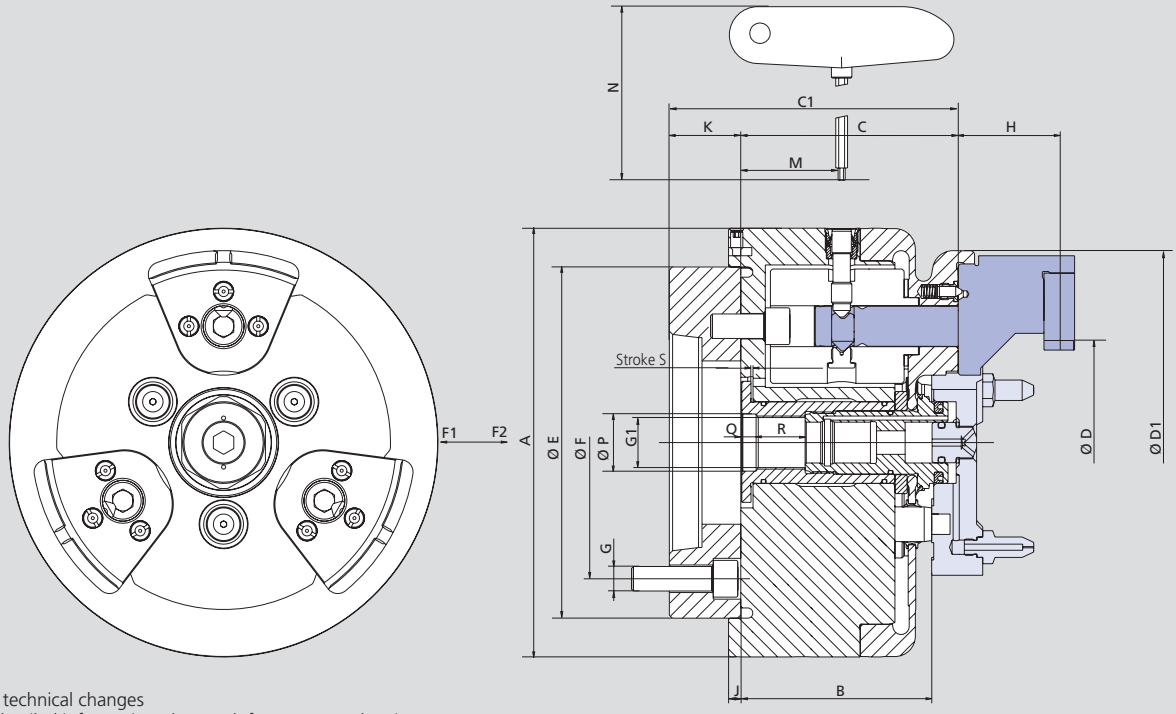

Subject to technical changes
For more detailed information please ask for customer drawing

SMW-AUTOBLOK Type			D-210		D-260		D-315
Mounting		**Size**	**A5**	**A6**	**A6**	**A8**	**A8**
	A	mm	210		260		315
	B	mm	93.5		108		111
	C	mm	106.5		120		125
	C1	mm	146.5		156		173
Clamping range min./max.	**D**	mm	20-175		40-220		60-275
	D1	mm	188		227		275
	E	mm	172		225		275
	F	mm	104.8	133.4	133.4	171.4	171.4
	G		M10	M12	M12	M16	M16
	G1		M26 x 1.5		M26 x 1.5		M30 x 1.5
Jaw height	**H**	mm	52		62		64
	J	mm	6		6		6
	K	mm	40		48		48
	M	mm	49.4		53		57
	N	mm	185		185		185
	P H6	mm	28		28		32
	Q	mm	7		7		7
	R	mm	24		24		29.5
Piston stroke	**S**	mm	1.0		1.5		1.7
Jaw stroke at distance H			1.0		1.1		1.2
Draw pull min./max.*	**F1**	kN	0-25		0-25		0-25
Draw pull for chuck open	**F2**	kN	30		30		30
Moment of inertia		kg·m²	0.16		0.45		0.75
Weight without top tooling		kg	30		44		60
Recommended actuating cylinders		**Type**	**SIN-DFR**		**SIN-DFR**		**SIN-DFR**

*Additional actuation force to the diaphragm spring clamping force applied by the clamping cylinder.

Advice: The max. allowed speed for the application is permanently marked on the corresponding top jaws and must not be exceeded.

Advice: Please note, that it is important, that the cylinder force for pushing and pulling can be set to different values independently!

Important: Never rotate the chuck without inserted jaws, otherwise the centrifugal force compensation mechanism will get damaged.

Type D

Diaphragm chuck
QUICK JAW CHANGE SYSTEMS

- Clamping jaws
- Closed center rotating cylinder
- Installation

Jaws type A

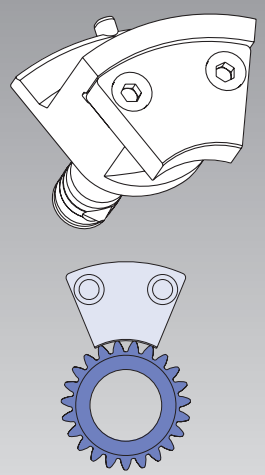

External clamping

Jaws type B

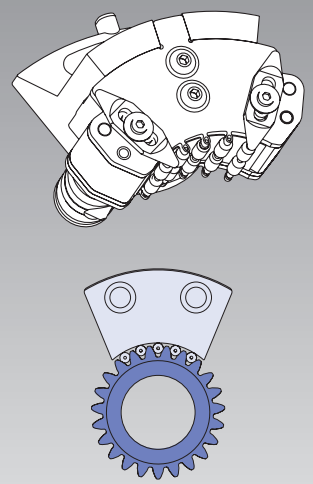

Pitchline clamping with roller cage

Jaws type C

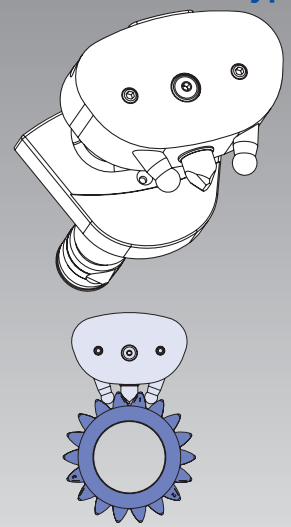

Pitchline clamping with clamping pin

D-KOMBI®

Radial-axial clamping
QUICK JAW CHANGE SYSTEMS

- Clamping jaws
- Rotating double piston cylinder
- Installation

Jaws type A

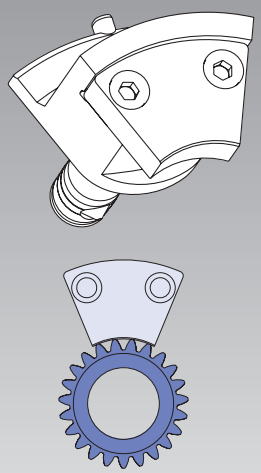

External clamping

Jaws type B

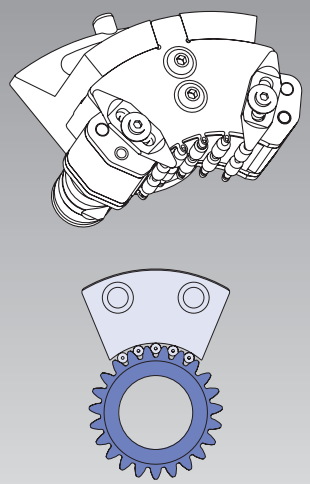

Pitchline clamping with roller cage

Jaws type C

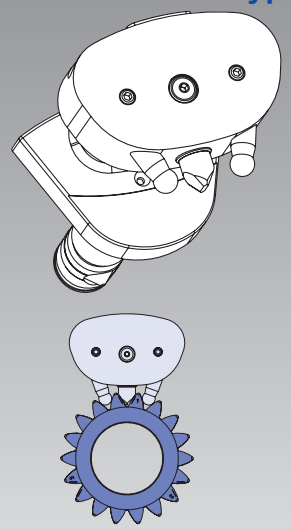

Pitchline clamping with pin

D-KOMBI®

Main dimensions and technical data

Radial-axial clamping
QUICK JAW CHANGE SYSTEMS

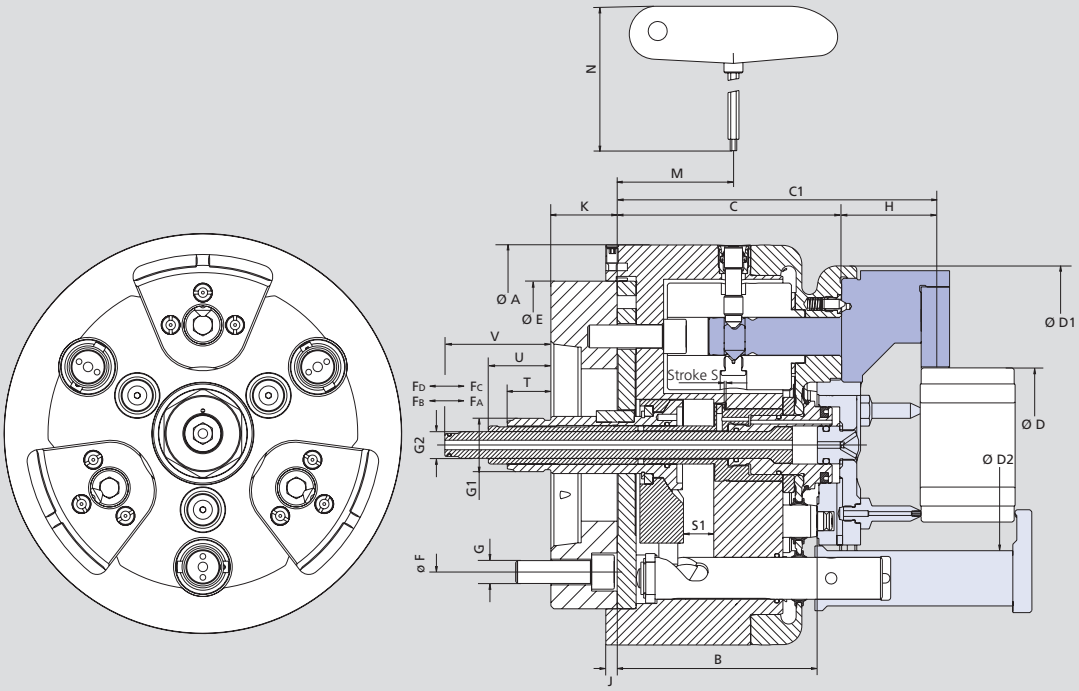

Subject to technical changes
For more detailed information please ask for customer drawing

SMW-AUTOBLOK Type			D-210 KOMBI		D-260 KOMBI		D-315 KOMBI	D-400 KOMBI	
Mounting		**Size**	**A5**	**A6**	**A6**	**A8**	**A8**	**A8**	**A11**
	A	mm	210		260		315	400	
	B	mm	105.5		111		116	123	
	C	mm	118.5		130		130	136	
	C1	mm	170.5		187		192	-	
Clamping range without fingers	**D**	mm	20-175		40-220		60-275	126-350	
	D1	mm	188		227		275	354	
Clamping range with fingers	**D2**	mm	111		153		203	268	
	E	mm	172		225		275	350	
	F	mm	104.8	133.4	133.4	171.4	171.4	171.4	235
	G		M10	M12	M12	M16	M16	M16	M20
	G1		M28 x 1.5		M28 x 1.5		M28 x 1.5	M28 x 1.5	
	G2		M14 x 1.0		M14 x 1.0		M14 x 1.0	M14 x 1.0	
Jaw height	**H**	mm	52		62		64	-	
	J	mm	6		6		6	6	
	K	mm	40		48		48	50	
	M	mm	61.4		61.9		61.9	66.5	
	N	mm	185		185		185	185	
Piston stroke	**S**	mm	1.0		1.5		1.5	1.5	
Axial stroke swing clamps	**S1**	mm	16		16		16	16	
	T	mm	18		10		10	8	
	U	mm	28		20		20	18	
	V	mm	51		43		43	41	
Jaw stroke at distance H		mm	1.0		1.1		1.2	0.87	
Draw pull min./max.*	**FD**	kN	0-25		0-25		0-25	0-25	
Draw pull for chuck open	**FC**	kN	20		20		20	20	
Draw pull swing clamps max.	**FB**	kN	6		9		9	18	
Draw pull swing clamps open	**FA**	kN	2		2		2	2	
Moment of inertia		kg·m²	0.16		0.45		0.75	2.26	
Weight without top tooling		kg	30		44		60	109	
Recommended actuating cylinder		**Type**	**ZHVD-DFR**		**ZHVD-DFR**		**ZHVD-DFR**	**ZHVD-DFR**	

* Additional draw pull to the diaphragme force actuated by the actuating cylinder

Advice: The max. allowed speed for the application is permanently marked on the corresponding top jaws and must not be exceeded.

Important: Never rotate the chuck without inserted jaws, otherwise the centrifugal force compensation mechanism will get damaged.

Type D-PLUS

Diaphragm chuck
QUICK JAW CHANGE SYSTEMS

Open center diaphragm chuck

Main dimensions and technical data

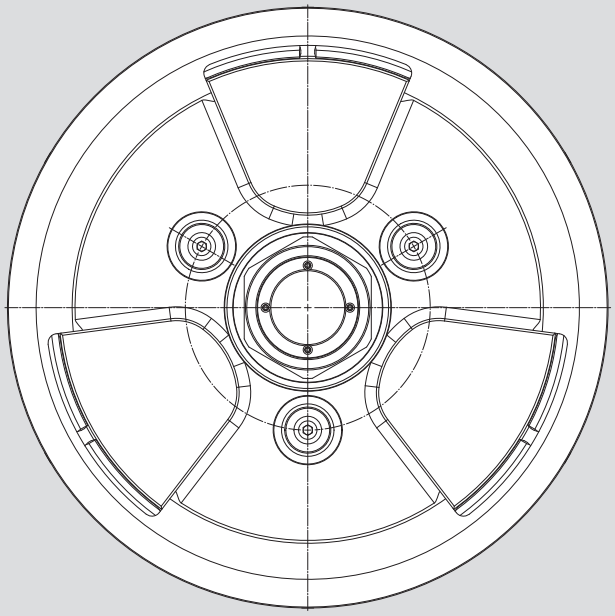

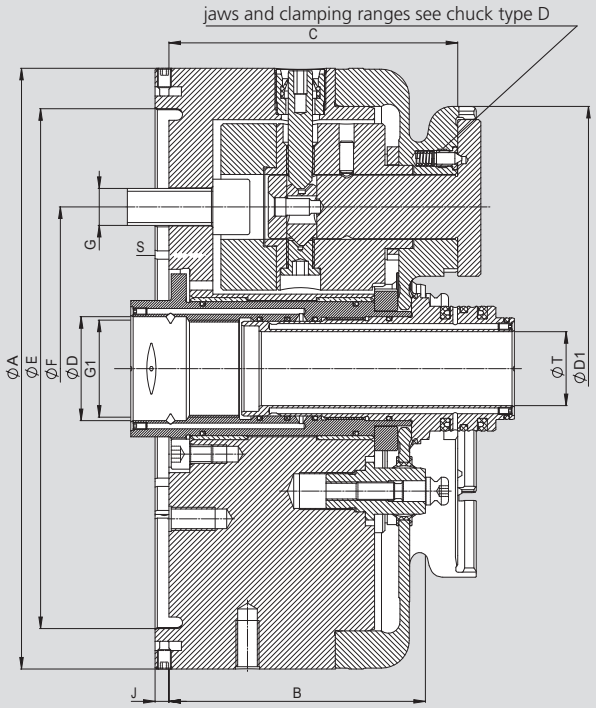

Subject to technical changes
For more detailed information please ask for customer drawing

SMW-AUTOBLOK Type			D-PLUS-260	D-PLUS-315
Mounting		**Size**	**225**	**275**
	A	mm	260	315
	B	mm	111	111
	C	mm	125	125
	D1	mm	227	275
	E	mm	225	275
	F	mm	140	171.4
	G		M16	M16
	G1		M42x1.5	M60x1.5
	J	mm	6	6
	P H6	mm	45	63
Piston stroke	**S**	mm	1.5	1.5
Through hole	**T**	mm	32	50
Draw pull min./max.*	**F1**	kN	0-25	0-30
Draw pull for chuck open	**F2**	kN	25	30
Moment of inertia		kg·m²	0.45	0.75
Weight without top tooling		kg	44	65
Recommended actuating cylinders		**Type**	**SIN-DFR**	**SIN-DFR**

*Additional actuation force to the diaphragm spring clamping force applied by the clamping cylinder.

Advice: The max. allowed speed for the application is permanently marked on the corresponding top jaws and must not be exceeded.

Advice: Please note, that it is important, that the cylinder force for pushing and pulling can be set to different values independently!

Important: Never rotate the chuck without inserted jaws, otherwise the centrifugal force compensation mechanism will get damaged.

Type D-PLUS

- Radial O.D. or pitch line clamping
- with central bore
- Centrifugal force compensation

Diaphragm chuck
QUICK JAW CHANGE SYSTEMS

Jaws type A

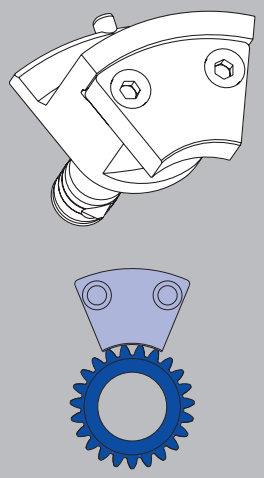

External clamping

Jaws type B

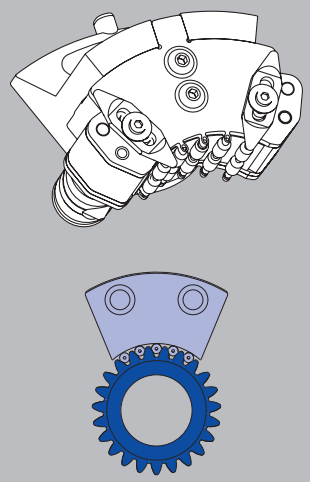

Pitchline clamping with roller cage

Jaws type C

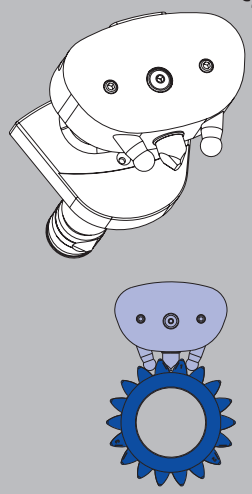

Pitchline clamping with clamping pin

Type D-VARIO

Diaphragm chuck
FLEXIBLE MODULAR SYSTEM

Main dimensions and technical data

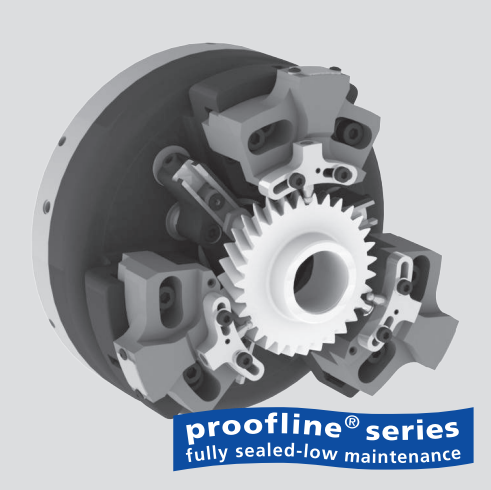

Application/customer benefits

- Flexible solution for grinding with quick adjustment for short set up times

Technical features

- Adjustable, modular jaw system for clamping different work pieces with the same jaws
- Key Lock System for quick positioning of the pitch of different work pieces
- Micrometer fine adjustment of the center line
- For small, medium and large batch sizes
- Workstop with medium feed for air sensing and integrated coolant nozzles optional
- Jaws for O.D. clamping (Type A) optional
- D-Vario Configurator: free application to configurate your set up (www.smw-autoblok.de/vario)

Standard equipment

Diaphragm chuck D-Vario (with mounting bolts)

Optional accessories in the modular system:

Pitch line clamping

- 6 different jaw sets for different outside diameters
- Key Lock System for different pitches of gears (see figure A, B and C)
- Clamping pins for different modules (Dia. of ball Ø 3,0 mm to 6,0 mm)
- Locators

O.D. clamping (Type A)

- 4 different jaw blanks for different outside diameters
- Factory finished jaws
- Locators

- Safe and quick configuration of all set-ups for different gears
- Web-APP: from anywhere with any device feasible (internet access needed)
- Availability for exporting all resolution of the results

With these free of charge D-VARIO Configurator you will be able to create individual configurations for different gears and set-ups. For input the data, there are only 3 steps needed.

Optional you could also make the interpretation of the work stop and the associated support bolts.

Through the integrated export function, the results can be saved at any time or transfered to a printer.

Start Web-App: **www.smw-autoblok.de/dvario**

A: Number of teeth is divisible by 3

Example of application:
gear with number of teeth [z] = 30

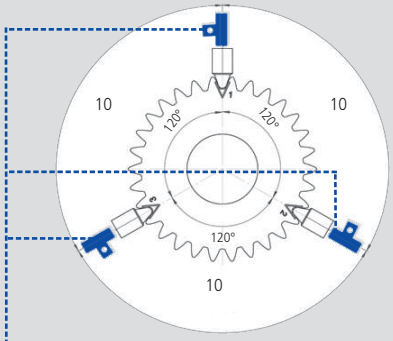

▶ Specification of Key Lock System:
3x Key straight

B: Number of teeth is not divisible by 3

Example of application:
gear with number of teeth [z] = 31

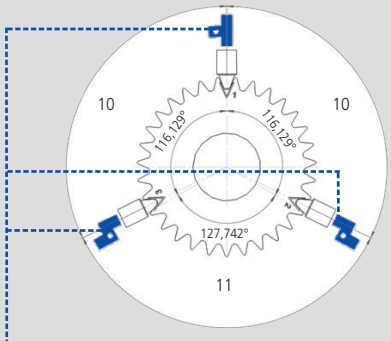

▶ Specification of Key Lock System:
1x Key straight,
2x Key for number of teeth 31

C: Number of teeth is not divisible by 3

Example of application:
gear with number of teeth [z] = 32

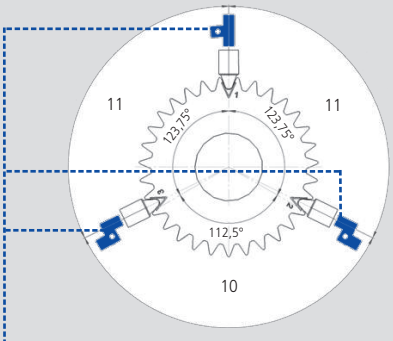

▶ Specification of Key Lock System:
1x Key straight,
2x Key for number of teeth 32

Type D-VARIO

Main dimensions and technical data

Diaphragm chuck
FLEXIBLE MODULAR SYSTEM

Top jaws and locator base are optional.

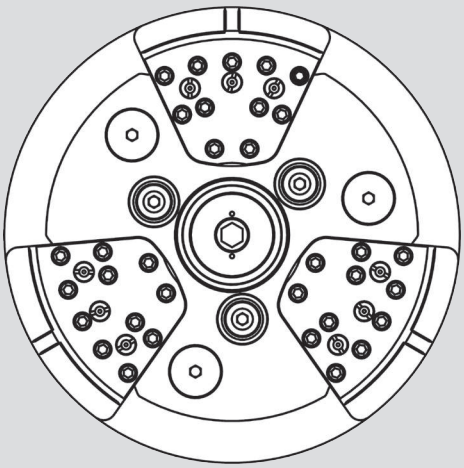

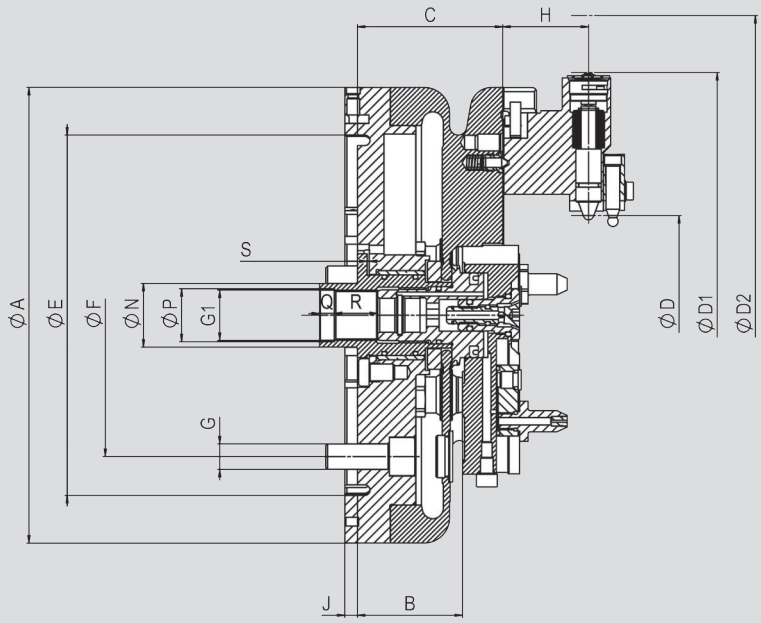

Subject to technical changes
For more detailed information please ask for customer drawing.

SMW-AUTOBLOK Type			D-VARIO 215
Mounting			**Z170**
Id. No.			069100
	A	mm	215
Locating Face for Locator	**B**	mm	49.5
	C	mm	68.5
Clamping range min./max.	**D**	mm	24 - 144
Swing min.	**D1**	mm	215
Swing max.	**D2**	mm	264
	E	mm	170
	F	mm	133.4
	G		M12
	G1		M24x1.5
Jaw height	**H**	mm	40.5
	J	mm	6
	P H8	mm	25
	Q	mm	7
	R	mm	20
Piston stroke	**S**	mm	1.0
Jaw stroke at distance H		mm	0.95
Draw pull min./max.*		kN	0-15
Draw pull for chuck open		kN	15
Moment of inertia		kg·m²	0.082
Weight without top tooling		kg	12.2
Recommended actuating cylinders		**Type**	**SIN-DFR**

* Additional draw pull to the diaphragme force actuated by the actuating cylinder

Advice: Please note: It is important, that the cylinder force for pushing and pulling can be set to different values independently!

Type D-VARIO

Diaphragm chuck
FLEXIBLE MODULAR SYSTEM

■ Overview clamping kit

Configuration of the set up for pitch line clamping within only 5 steps:

I

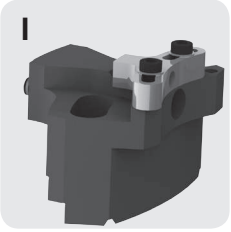

First you have to choose your matching top jaw (size 1 - 6) for the outside diameter [d_a] of the gear to be machined. Each size of top jaw can cover 20 mm outside diameter using two different types of clamping pins (Type A and B). One set of top jaw consists of 3 pieces including 1 straight Key Lock insert.

II

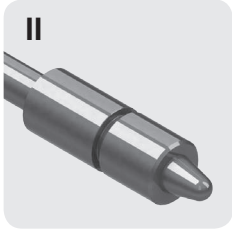

The determination of the spherical clamping pins is made according to the ball dimension of the gear.
There are 2 types of clamping pins:
Type A for the first 10 mm of the clamping range of the top jaws.
Type B for the second 10 mm of the clamping range of the top jaws.

III

Optionally prelocator pins are available. Prelocator pins are used at automatic loading. The determination is made according to the clamping pins used.

IV

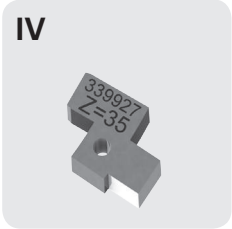

One set of Key Lock insert consists of 2 keys. Gears, which number of teeth that is divisible by 3 can be machined with 3 of the same type Key Lock insert (straight). For all gears, which number of teeth is not divisible by 3, there are different key insert sets available according to the number of teeth. The Key Lock inserts are the same for all 6 sizes of top jaws.

V

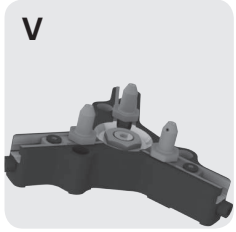

The following types of locator bases are available:
Type A: without air sensing / without nozzle for coolant
Type B: without air sensing/with nozzle for coolant
Type C: with air sensing / with nozzle for coolant
The height of the locator posts is depending on the gear.

Overview of the clamping kit:

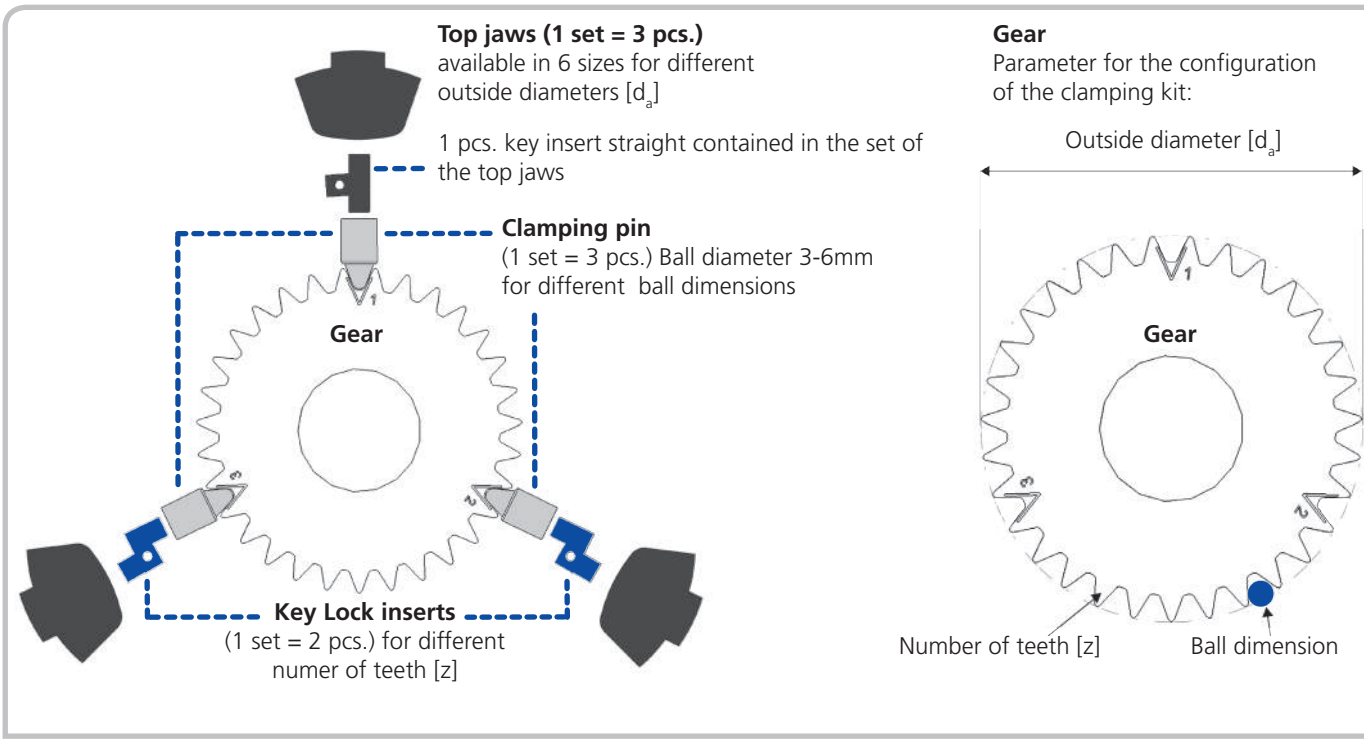

D-Vario Configurator
free application to configurate your set up
www.smw-autoblok.de

I. Determination of the top jaws

Top Jaws	Size	1	2	3	4	5	6
Outside diameter of gear d_a	mm	**24-44**	**44-64**	**64-84**	**84-104**	**104-124**	**124-144**
Number of teeth z	number	16-37	14-44	13-86	13-86	13-86	13-86
Inside clearance diameter of jaws	mm	46	68	88	108	128	148
Swing diameter	mm	164	184	204	224	244	264
Weight / set	kg	2.9	3.0	3.0	3.1	3.1	3.1
Order number / set of 3 pieces	Id. No.	**630741**	**630742**	**630743**	**630744**	**630745**	**630746**

Clamping pin Type		A	B	A	B	A	B	A	B	A	B	A	B
Clamping range	mm	24-34	34-44	44-54	54-64	64-74	74-84	84-94	94-104	104-114	114-124	124-134	134-144

II. / III. Determination of the clamping pins (and optional prelocator pins)

Clamping pin type	Set	Type A	Available prelocator pins	Type B	Available prelocator pins
Ball diameter Ø 3,0	Id. No.	**630851**	339835	**630844**	339843
Ball diameter Ø 3,5	Id. No.	**630852**	339836	**630845**	339844
Ball diameter Ø 4,0	Id. No.	**630853**	339837	**630846**	339845
Ball diameter Ø 4,5	Id. No.	**630854**	339838	**630847**	339846
Ball diameter Ø 5,0	Id. No.	**630855**	339839	**630848**	339847
Ball diameter Ø 5,5	Id. No.	**630856**	339840	**630849**	339848
Ball diameter Ø 6,0	Id. No.	**630857**	339841	**630850**	339849

Clamping pins

Clamping pin type A

Ball diameter
Ø 3; 3,5; 4; 4,5; 5; 5,5; 6

Top jaw 1	**Ø 24-34 mm**
Top jaw 2	**Ø 44-54 mm**
Top jaw 3	**Ø 64-74 mm**
Top jaw 4	**Ø 84-94 mm**
Top jaw 5	**Ø 104-114 mm**
Top jaw 6	**Ø 124-134 mm**

Clamping pin type B

Ball diameter
Ø 3; 3,5; 4; 4,5; 5; 5,5; 6

Top jaw 1	**Ø 34-44 mm**
Top jaw 2	**Ø 54-64 mm**
Top jaw 3	**Ø 74-84 mm**
Top jaw 4	**Ø 94-104 mm**
Top jaw 5	**Ø 114-124 mm**
Top jaw 6	**Ø 134-144 mm**

- **Clamping pin type A**
  For the first 10 mm of the clamping range of the top jaws.
- **Clamping pin type B**
  For the second 10 mm of the clamping range of the top jaws.
- **Compatibility**
  All types and sizes of clamping bolts are compatible to all top jaws.

IV. Key Lock inserts for different number of teeth of gears

Id. No. Key Lock insert for gears which number of teeths is not divisible by 3 (1 set = 2 pcs.)									
z = 10	**z = 11**	**z = 13**	**z = 14**	**z = 16**	**z = 17**	**z = 19**	**z = 20**	**z = 22**	**z = 23**
339911	339912	339913	339914	339915	339916	339917	339918	339919	339920
z = 25	**z = 26**	**z = 28**	**z = 29**	**z = 31**	**z = 32**	**z = 34**	**z = 35**	**z = 37**	**z = 38**
339921	339922	339923	339924	338725	339925	339926	339927	339928	339929
z = 40	**z = 41**	**z = 43**	**z = 44**	**z = 46**	**z = 47**	**z = 49**	**z = 50**	**z = 52**	**z = 53**
339930	339931	339932	339933	339934	339935	339936	339937	339938	339939
z = 55	**z = 56**	**z = 58**	**z = 59**	**z = 61**	**z = 62**	**z = 64**	**z = 65**	**z = 67**	**z = 68**
339940	339941	339942	339943	339944	339945	339946	339947	339948	339949
z = 70	**z = 71**	**z = 73**	**z = 74**	**z = 76**	**z = 77**	**z = 79**	**z = 80**	**z = 82**	**z = 83**
339950	339951	339952	339953	339954	339955	339956	339957	339958	339959
z = 85	**z = 86**								
339960	339961								

Id. No. Key Lock insert for gears which number of teeths is divisible by 3 (1 set = 2 pcs.)	
straight	
338724	

Order Example:

Gear with number of teeth 32 ► **not divisible by 3** ► **Id. No. 339925 (1 set = 2 pcs.)**

Gear with number of teeth 33 ► **divisible by 3** ► **Id. No. 338724 (1 set = 2 pcs.)**

1 straight Key Look that comes with the chuck always remains in use.

Key Lock insert (1 set = 2 pcs.)

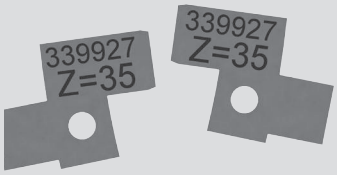

► **Compatibility**
All Key Lock inserts are compatible to all top jaws.

V. Locator base

Locator base

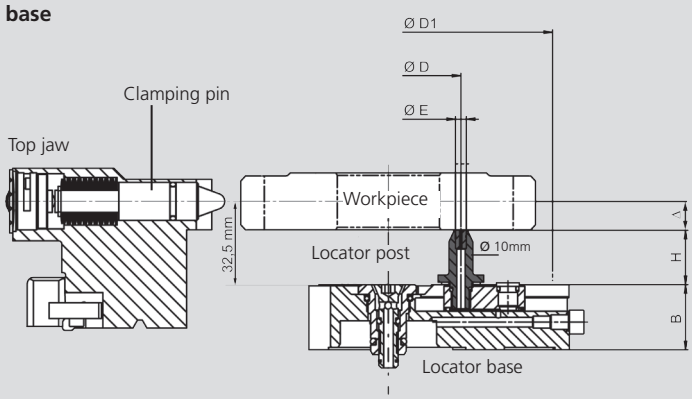

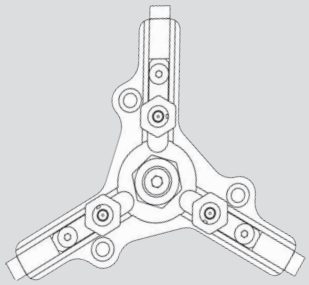

Determination of height of locator posts:
Δ = Distance between clamping position and locating face
Height of locator posts [H] = 32,5 mm - Δ

Clamping position = 1/2 serration length / at longer serrations it is the requested clamping position.
In case the lowest face is not the locating face, please ask our customer service.

Locator base			Type A	Type B	Type C
Medium feed for air sensing			-	-	X
Noozle for coolant			-	X	X
Locating diameter min.	**D**	min.	22	47	47
Locating diameter max.	**D1**	max.	136	136	136
Width	**B**	mm	27	27	27
Order Number		Id. No.	339860	339859	339858

Locator posts with contact face diameter [E] 2,5 mm	
Height[H] = 12,5 mm	339861
Height[H] = 15,0 mm	339862
Height[H] = 17,5 mm	339863
Height[H] = 20,0 mm	339864
Height[H] = 22,5 mm	339865
Height[H] = 25,0 mm	339866
Height[H] = 27,5 mm	339867
Height[H] = 30,0 mm	339868
Height[H] = 32,5 mm	339869
Height[H] = 35,0 mm	339870
Height[H] = 37,5 mm	339871
Height[H] = 40,0 mm	339872
Height[H] = 42,5 mm	339873
Height[H] = 45,0 mm	339874
Height[H] = 47,5 mm	339875
Height[H] = 50,0 mm	339876

I.D. Number is for one set (=3 pieces)

Locator posts with contact face diameter [E] 4,5 mm	
Height[H] = 12,5 mm	339877
Height[H] = 15,0 mm	339878
Height[H] = 17,5 mm	339879
Height[H] = 20,0 mm	339880
Height[H] = 22,5 mm	339881
Height[H] = 25,0 mm	339882
Height[H] = 27,5 mm	339883
Height[H] = 30,0 mm	339884
Height[H] = 32,5 mm	339885
Height[H] = 35,0 mm	339886
Height[H] = 37,5 mm	339887
Height[H] = 40,0 mm	339888
Height[H] = 42,5 mm	339889
Height[H] = 45,0 mm	339890
Height[H] = 47,5 mm	339891
Height[H] = 50,0 mm	339892

I.D. Number is for one set (=3 pieces)

Type D-VARIO

Diaphragm chuck
FLEXIBLE MODULAR SYSTEM

■ Jaws type A for O.D. clamping

Jaws Type A

Jaws Type A (through hardened)

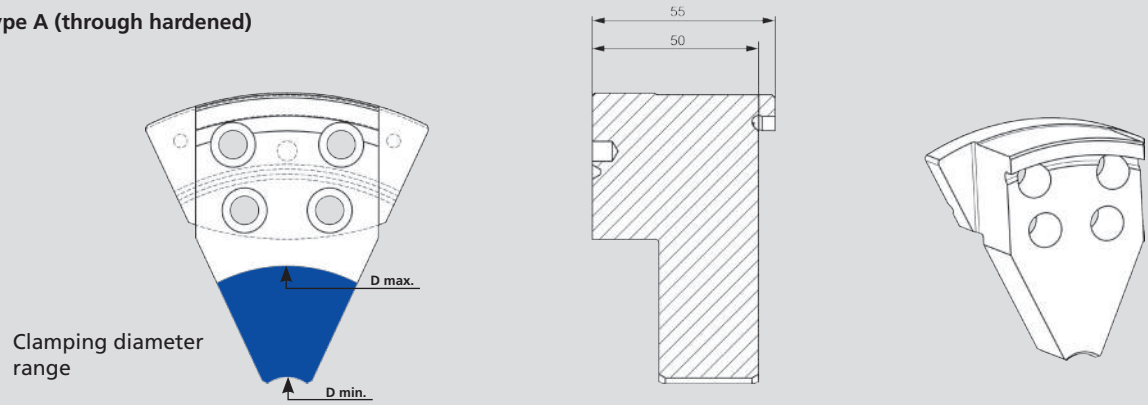

Jaws type A		1	2	3	4	5	6
Clamping Range Ø D min. - D max.	mm	20-40	40-60	60-80	80-100	100-120	120-140
Weight / set	kg	1,1	1,1	1,0	1,0	1,0	0,8
Blank jaws (set of 3 pcs.)	Id. No.	631484		631485		631486	631487
Jaws factory finished* (set of 3 pcs.)	Id. No.	631488	631489	631490	631491	631492	631493

* Jaws are factory finished according to the specified clamping diameter.
Note: The clamping diameter must be specified in case of order.

Device

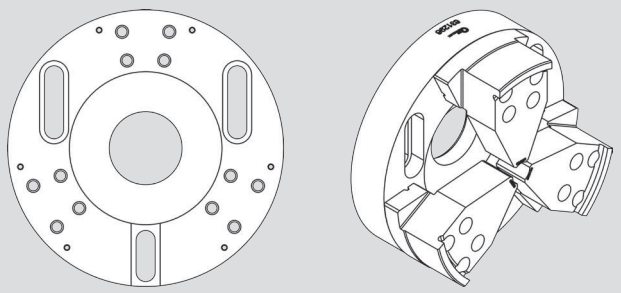

Device for machining of the blank jaws type A	
Jaws type A sizes 1 - 6	631296

The device is needed to pre-machine the blank jaws type A. Then, the jaws must be finish ground to the clamping diameter on the D-Vario chuck. For this operation, the jaws have to be clamped with the grinding rings.

Grinding rings (1 Set = 2 pcs.)

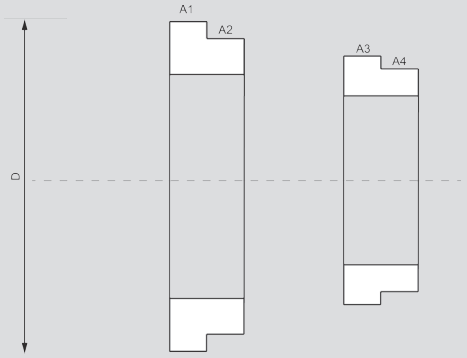

Recommended grinding rings	
Jaws type A sizes 1 - 6	631309

Grinding data

1. Grinding	A1	D = 177,0 mm	residual jaw stroke 0,25 mm
2. Grinding	A2	D = 176,9 mm	residual jaw stroke 0,20 mm
3. Grinding	A3	D = 176,8 mm	residual jaw stroke 0,15 mm
4. Grinding	A4	D = 176,7 mm	residual jaw stroke 0,10 mm

The clamping diameter A1 is used for the first finish grinding process. The smaller clamping diameter of the grinding rings (A2-A4) are used to regrind worn or damaged existing jaws.